Cavallotto in acciaio inox filettato per tubi
Stainless Steel strap (U-bolt)

art.9440 sim. DIN 3570

dimensioni in mm
Dimensions in mm

Grado A2
Grade A2

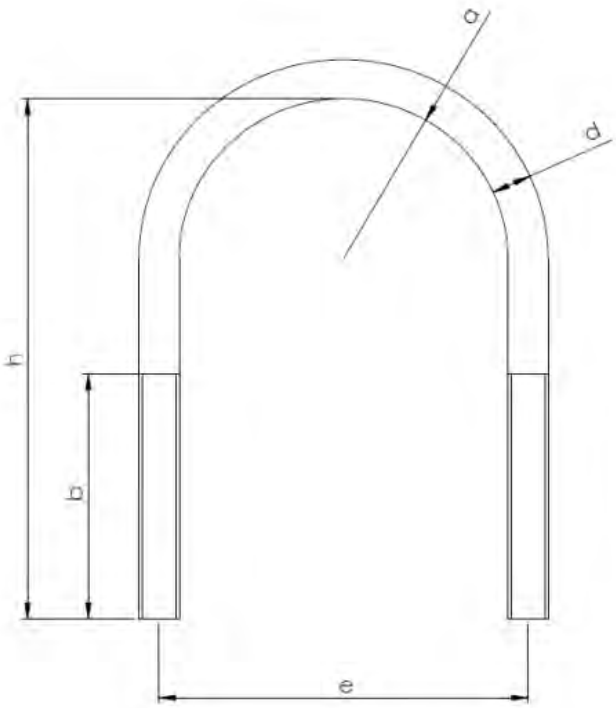

dadi e rondelle sono venduti separatamente
nuts and washers sold separately

Art-Nr.	d		a		h		b		e	
9440-2-8X38	7,10		23,0		38,0		20,0		31,0	
	7,07	7,10	22,0	24,0	37,0	39,0	19,0	21,0	30,0	32,0
9440-2-8X46	7,10		28,0		46,0		20,0		36,0	
	7,07	7,10	27,0	29,0	45,0	47,0	19,0	21,0	35,00	37,00
9440-2-8X50	7,10		35,0		50,0		25,0		43,0	
	7,07	7,10	34,0	36,0	49,0	51,0	24,0	26,0	42,0	44,0
9440-2-8X60	7,10		42,0		60,0		30,0		50,0	
	7,07	7,10	41,0	43,0	59,0	61,0	29,0	31,0	49,0	51,0
9440-2-8X80	7,10		35,0		80,0		35,0		43,0	
	7,07	7,10	34,0	36,0	79,0	81,0	34,0	36,0	42,0	44,0
9440-2-8X110	7,10		65,0		110,0		50,0		73,0	
	7,07	7,10	64,0	66,0	109,0	111,0	49,0	51,0	72,0	74,0
9440-2-8X120	7,10		82,0		120,0		50,0		90,0	
	7,07	7,10	81,0	83,0	119,0	121,0	49,0	51,0	89,0	91,0

last edit 11/11/2021
DRAWING N. 1205